LV-414SQ Square Recessed LED light

DATA SHEET

The LV-414SQ Square Recessed light is a compact fixture which is packed full of innovative key features to assist the designer and end user. This fixture is machined from high quality materials and is available in a wide range of finishes to suit most applications. The LV-414SQ has been designed as a universal fixture which can be used in a multitude of design scenarios, from uplighting walls and pillars, to step lighting or mounting in patios and decks. Its also well suited for interior lighting schemes.

Light Visuals SQUARE RECESSED LIGHT (LV-SS414SQ) 316L STAINLESS STEEL - Made to order - up to 3 weeks products are made to order. (Please allow 2-4 weeks for delivery).

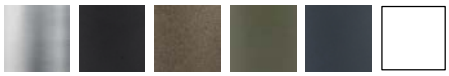

Available in 316L stainless steel, or UV stable polyester powder coated stainless steel finishes.

350mA 1.2w	500mA 1.7w	700mA 2.4w	3.2v	I I I	LED	IP68	BIN 8B4	10mm	F		PART L

Key Features

- **Replaceable LED Module**. Permits easy change of colour temperature or replacement of the LED at the end of it's long life.
- **Interchangeable Colour Coded Reflectors (Optics)**. For complete design control of beam angles.
- **LED Open Circuit Protection**. Easy identification of a failed LED due to incorrect installation or LED end of life.
- **Internal Anti-Wicking Barrier**. Eliminates moisture ingress due to incorrect cable joints.
- **Choice of 3 Drive Currents.** 350mA, 500mA, 700mA. For complete design control of light output.
- **Choice of 2 Colour Temperatures.** 2700ºK Warm White, 4000ºK Cool White.
- **Single Bin LED's.** Ensures complete colour consistency with no variation in colour temperature between products.
- **10 Year Warranty** body. **5 Year Warranty** LED board.

www.exteriorlightsuk.co.uk sales@exteriorlightsuk.co.uk Tel: 01689 606342

LV-414SQ Square Recessed LED light

DATA SHEET

Landscape and Architectural Lighting

MADE IN BRITAIN

Specification

- Designed, manufactured, and hand assembled in England
- **Wiring**: (SERIES)
- Requires a remote (constant current) LED driver 700mA maximum
- **Choice of Light Outputs**: 350mA = 1.2w, 500mA = 1.7w, 700mA = 2.4w
- **Forward Voltage**: 3.2v DC
- **Colour Temperature**: 2700ºK (warm white) or 4000ºK (Cool white)
- **Light Source**: Cree XP-E (Light Visuals proprietary replaceable LED module)
- **Binning**: 2 Step MacAdams Ellipse binning quality 2700ºK only
- **Colour Rendering Index**: CRI 85
- **Lumens**: 80lm@350mA 150lm@700mA (Typical)
- **Dimmable**: 0-10V
- **Beam Choice**: 10º, 18º, 32º, 42º
- **Ingress Protection**: IP68 (submersible)
- **Cable**: 1m 2 core HO5RN-F rubber cable. (can be supplied up to 10m at additional cost)
- **Warranty**: 10 year warranty on brass, stainless steel, powder coated stainless steel)
- **Warranty**: 5 year warranty LED board
- PVC installation sleeve supplied

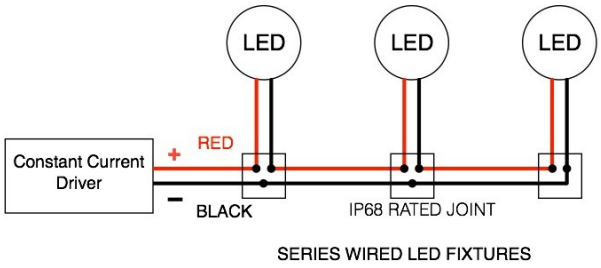

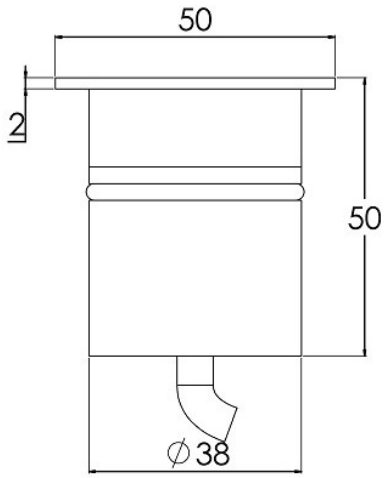

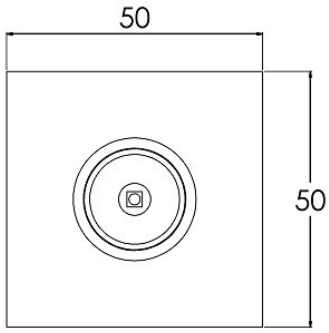

July 2018

www.exteriorlightsuk.co.uk sales@exteriorlightsuk.co.uk Tel: 01689 606342

© 2018 Light Visuals Ltd

Light Visuals reserves the right to change data without prior notice