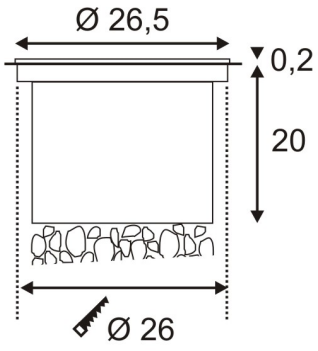

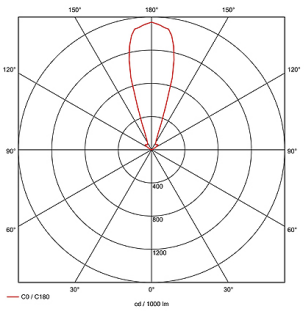

ADJUST HQI 70 recessed ground luminaire, round, stainless steel 304, G12, max. 70W, IP67

Article no.:	228240
Catalogue page:	652
Lampholder:	G12
Bulb:	HQI-T / CDM-T 70W
Number of bulbs:	1
Bulb included:	no
Installation diameter:	26,0 cm
Installation depth:	22 cm
Swivel range:	15 °
Product diameter:	26,50 cm
Weight net.:	5,121 kg
Operating voltage:	230 Volt
Max. Wattage:	70 Watt
Protection class:	IP 67
Material:	aluminium / stainless steel 304
Colour:	stainless steel
Way of mounting:	recessed ground mounting
Remarks:	Maximum cable diameter 12 mm Weigth capacity 5 tons. Through-wiring is possible Conventional ballast included
Energy effeciency class ballast:	A3
Recommended bulbs:	507130 / Halogen metal halide lamp 70W CDM-T, 3000K, G12 507430 / Halogen metal halide lamp 70W CDM-T ELITE, 3000K, G12

Outdoor recessed floor luminaire type: ADJUST HQI 70 recessed ground luminaire, round, stainless steel 304, G12, max. 70W, IP67 made from aluminium / stainless steel 304, Ref.:228240 Colour version: stainless steel. Max. wattage 70 Watt, at an operating voltage of 230 Volt. Protection class IP 67, Way of mounting: recessed ground mounting. The product can be swivelled at 15°. Recess dimensions: Installation diameter: 26 cm, Installation depth: 22 cm. Product dimensions: Product diameter: 26,5 cm, Weight (net): 5,121 kg. Equipped with G12 lampholder for bulb type HQI-T / CDM-T 70W Maximum cable diameter 12 mm. Weigth capacity 5 tons. Through-wiring is possible. Conventional ballast included. Recommended bulb 1: Halogen metal halide lamp 70W CDM-T, 3000K, G12, Ref.: 507130 Recommended bulb 2: Halogen metal halide lamp 70W CDM-T ELITE, 3000K, G12, Ref.: 507430